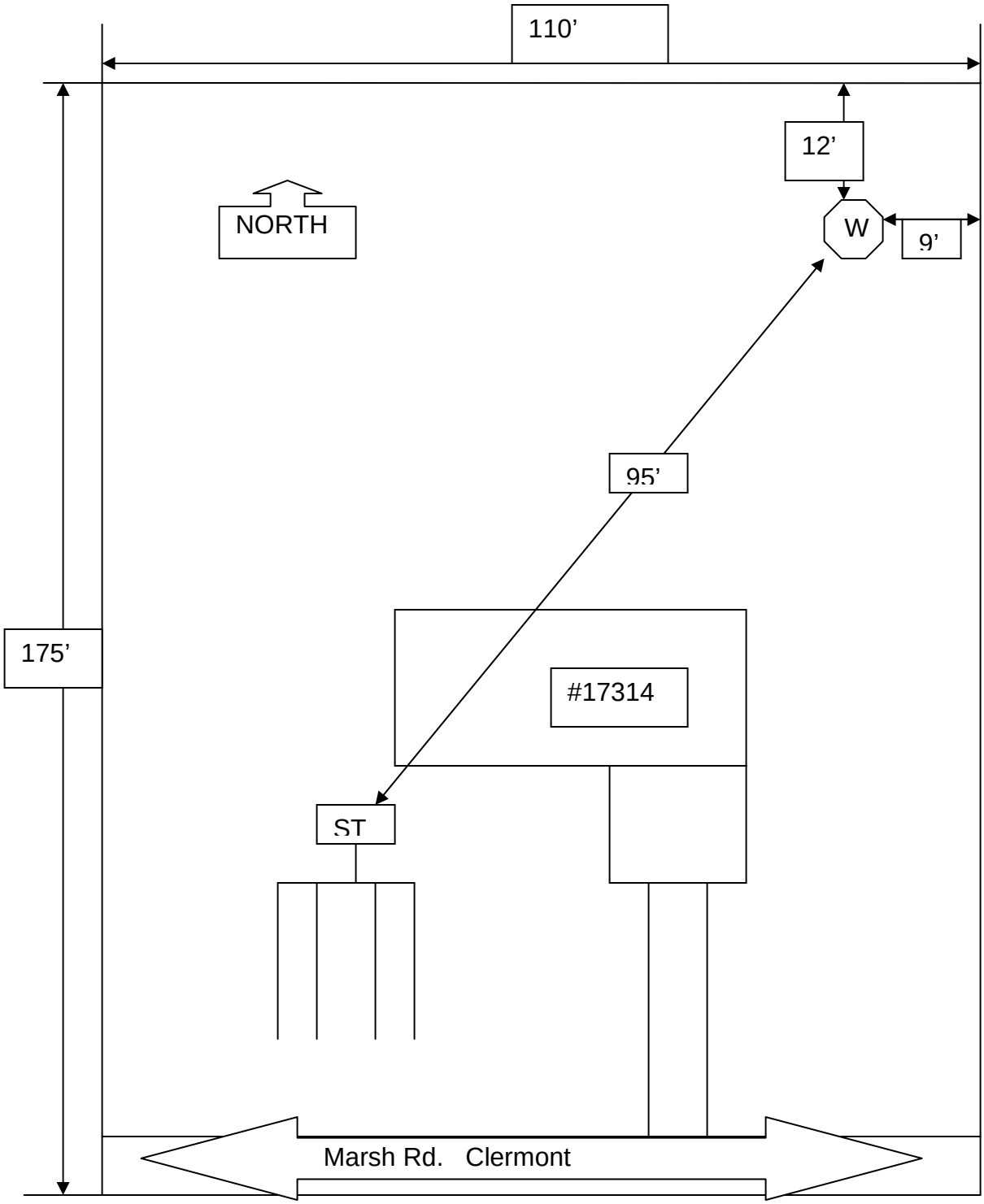

SITE PLAN EXAMPLE